Technical brochure

Thermostatic expansion valves T2 / TE2

Thermostatic expansion valves regulate the injection of refrigerant liquid into evaporators.

Injection is controlled by the refrigerant superheat.

Therefore the valves are especially suitable for liquid injection in "dry" evaporators where the superheat at the evaporator outlet is proportional to the evaporator load.

Features

- *Large temperature range*
  Equally applicable to freezing, refrigeration and air conditioning applications.
- *Interchangeable orifice assembly*
  - easy storage
  - easy capacity matching
  - better service.
- *Rated capacities from 0.96 to 20.5 kW (0.27 to 5.82 TR) for R407C.*
- *Can be supplied with MOP*
  (Max. Operating Pressure)
  Protects the compressor motor against excessive evaporating pressure during normal operation.
- *Stainless steel bulb and Danfoss patented bulb strap*
  Fast and easy to install.
  Good temperature transfer from pipe to bulb.
- *Valves for special temperature ranges can be supplied.*
- Design protected

Identification

The thermostatic element has laser engraved data on top of the diaphragm. This engraving gives valve type (with code number), evaporating temperature range, MOP point, refrigerant, and max. working pressure. PS/MWP.

The code refers to the refrigerant for which the valve is designed:
X = R22/R407C[1)]
Z = R407C
N = R134a
S = R404A/ R507

Production place and date
N4511A =
N = Nordborg, Denmark
(BE = Wuqing, China)
45 = week
11 = 2011
A = Monday

[1)] For R407C plants, please select valves from the dedicated R407C program

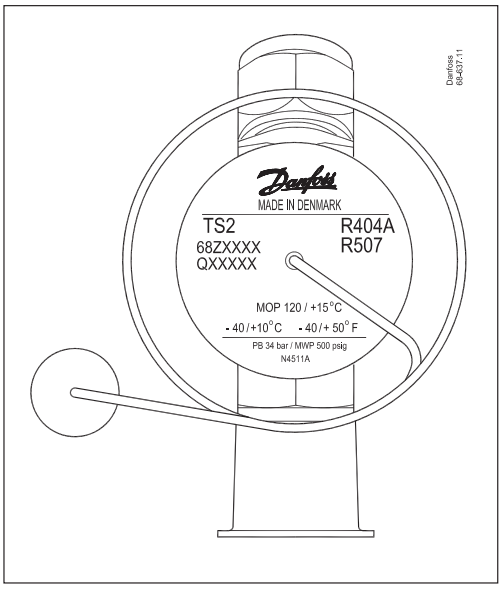

Orifice assembly for T 2 and TE 2
The orifice assembly is marked with the orifice size (e.g. 06) and week stamp + last number in the year (e.g. 174).
The orifice assembly number is also given on the lid of its plastic container.

Orifice assembly and filter for flare x flare version for T 2 and TE 2

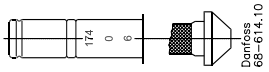

Capillary tube label for T 2 and TE 2
The label gives the orifice size (04) and consists of the lid of the orifice assembly plastic container. It can easily be fastened around the expansion valve capillary tube to clearly identify the valve size.

Capillary tube label T 2 and TE 2

Technical data

Max. temperature
Bulb, when valve is installed: 100°C
Bulb, element not mounted: 60°C

Min. temperature
T 2 → TE 2: –60°C

Max. test pressure
PT = 38 bar

Max. working pressure
PS/MWP = 34 bar

MOP-points

Refrigerant	Range N –40°C → +10°C	Range NM –40°C → –5°C	Range NL –40°C → –15°C	Range B –60°C → –25°C
	MOP-point in evaporating temperature t_e and evaporating pressure p_e			
	+15°C / +60°F	0°C / +32°F	–10°C / +15°F	–20°C / –4°F
R22	100 psig/6.9 bar (abs)	60 psig/4.1 bar (abs)	35 psig/2.4 bar (abs)	20 psig/1.4 bar (abs)
R407C	95 psig/6.6 bar (abs)			
R134a	55 psig/3.8 bar (abs)	30 psig/2.1 bar (abs)	15 psig/1.0 bar (abs)	
R404A/R507	120 psig/8.3 bar (abs)	75 psig/5.2 bar (abs)	50 psig/3.4 bar (abs)	30 psig/2.1 bar (abs)

Superheat

SS = static superheat
OS = opening superheat
SH = SS + OS = total superheat
Q_{nom} = rated capacity
Q_{max} = maximum capacity

Static superheat SS can be adjusted with setting spindle.

The standard superheat setting SS is 5 K for valves without MOP and 4 K for valves with MOP.
The opening superheat OS is 6 K from when opening begins to where the valve gives its rated capacity $Q_{nom.}$

Example
Static superheat SS = 5 K
Opening superheat OS = 6 K
Total superheat SH = 5 + 6 = 11 K

Design
Function

General
T 2 and TE 2 valves have an interchangeable orifice assembly.

The orifice assembly is suitable for all versions of valve body and refrigerants and in all evaporating temperature ranges.
The charge in the thermostatic element depends on the refrigerant and evaporating temperature range.
The valves are available with internal (T2) or external (TE2) pressure equalization.

External pressure equalization should always be used on systems with liquid distributors.
The bulb gives fast and precise reaction to temperature changes in the evaporator. The bulb is fixed with a Danfoss patented bulb strap for quick, easy and reliable connection. The valves are able to withstand the effects that normally occur with hot gas defrosting.

To ensure long operating life, the valve cone and seat are made of a special alloy with particularly good wear qualities.

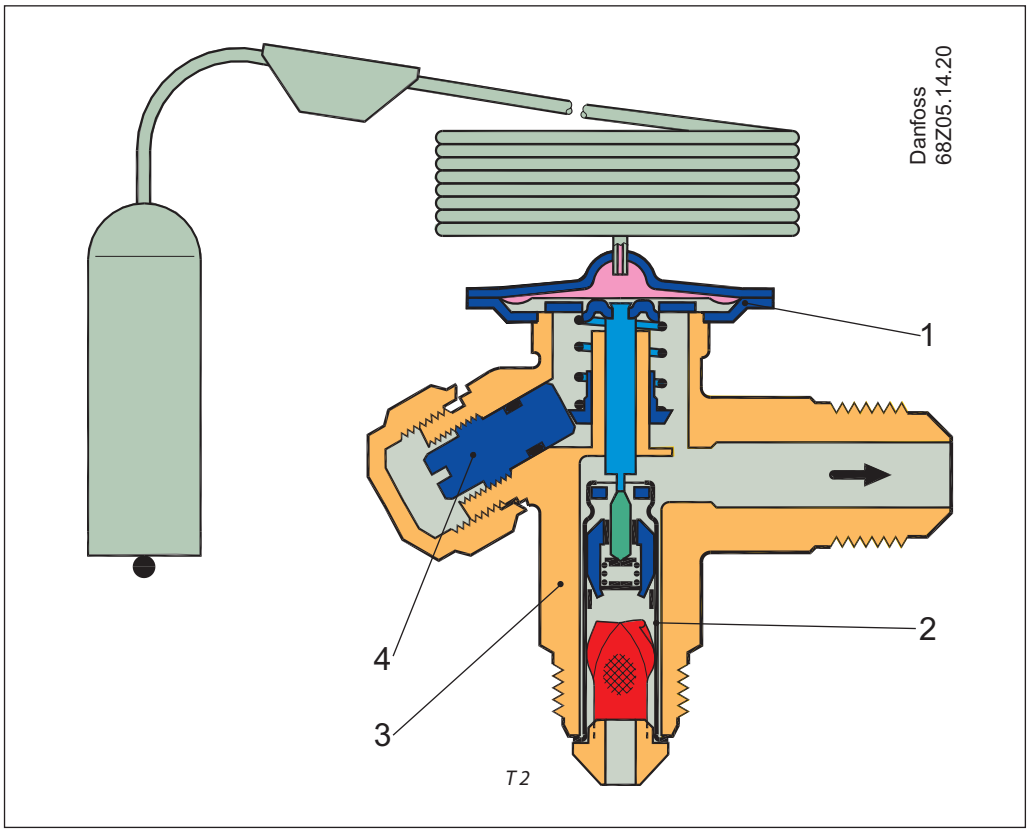

1. Thermostatic element (diaphragm)
2. Interchangeable orifice assembly
3. Valve body
4. Superheat setting spindle (see instructions)

Ordering. Components with flare × flare connection

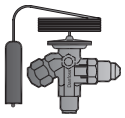

Thermostatic element with sensor band. Without orifice, filter cone and nuts.

Refrigerant	Valve type	Pressure equalization[1]	Capillary tube	Connection		Code no.					
				Inlet × outlet [1]		Range N −40 to +10°C		Range NM −40 to −5°C	Range NL −40 to −15°C	Range B −60 to −25°C	
			m	in. × in.	mm × mm	Without MOP	With MOP	With MOP	With MOP	Without MOP	With MOP
R22/R407C[2]	TX 2	Int.	1.5	3/8 × 1/2	10 × 12	**068Z3206**	**068Z3208**	**068Z3224**	**068Z3226**	**068Z3207**	**068Z3228**
	TEX 2	Ext.	1.5	3/8 × 1/2	10 × 12	**068Z3209**	**068Z3211**	**068Z3225**	**068Z3227**	**068Z3210**	**068Z3229**
R407C	TZ 2	Int.	1.5	3/8 × 1/2	10 × 12	**068Z3496**	**068Z3516**				
	TEZ 2	Ext.	1.5	3/8 × 1/2	10 × 12	**068Z3501**	**068Z3517**				
R134a	TN 2	Int.	1.5	3/8 × 1/2	10 × 12	**068Z3346**	**068Z3347**	**068Z3393**	**068Z3369**		
	TEN 2	Ext.	1.5	3/8 × 1/2	10 × 12	**068Z3348**	**068Z3349**	**068Z3392**	**068Z3370**		
R404A/ R507	TS 2	Int.	1.5	3/8 × 1/2	10 × 12	**068Z3400**	**068Z3402**	**068Z3406**	**068Z3408**	**068Z3401**	**068Z3410**
	TES 2	Ext.	1.5	3/8 × 1/2	10 × 12	**068Z3403**	**068Z3405**	**068Z3407**	**068Z3409**	**068Z3404**	**068Z3411**

[1]) See the section "Flare connections".
[2]) For R407C plants. Please select valves from the dedicated R407C program

Flare connections

Connection for copper tubing with outside diameter		Reducer for copper tubing with outside diameter		Code no.
in.	mm	in.	mm	
1/4	6			**011L1101**
3/8	10			**011L1135**
1/2	12			**011L1103**
		1/4	6	**011L1107**

Example :
A TE 2 thermostatic expansion valve consists of two elements + flare nuts if required:
- 1 thermostatic element
- 1 orifice assembly and flare nuts

When ordering one thermostatic expansion valve, TEX 2 with orifice 01, five code numbers are required:
- 1-off thermostatic element **068Z3209**
- 1-off orifice assembly 01 **068-2010**
- 1-off 3/8 in. flare nut **011L1135**
- 1-off 1/2 in. flare nut **011L1103**
- 1-off 1/4 in. flare nut **011L1101**

Orifice assembly with filter

The rated capacity is based on:
Evaporating temperature t_e = +4.4 °C

Condensing temperature t_c = +38 °C
Refrigerant temperature ahead of valve t_l = +37 °C

Range N: −40 to +10°C

Orifice no.	Nominal capacity in tons (TR)				Nominal capacity in kW				Code no.[2])
	R22	R407C	R134a	R404A R507	R22	R407C	R134a	R404A R507	
0X	0.25	0.27	0.19	0.18	0.9	0.96	0.68	0.65	**068-2002**
00	0.51	0.53	0.34	0.37	1.78	1.87	1.2	1.3	**068-2003**
01	0.99	1.04	0.59	0.75	3.48	3.67	2.08	2.64	**068-2010**
02	1.34	1.41	0.73	1.05	4.72	4.96	2.55	3.7	**068-2015**
03	2.27	2.4	1.22	1.79	8.01	8.45	4.3	6.29	**068-2006**
04	3.45	3.67	1.82	2.83	12.2	12.9	6.4	9.97	**068-2007**
05	4.76	4.86	2.4	3.71	16.8	17.1	8.43	13.1	**068-2008**
06	5.6	5.82	2.87	4.42	19.7	20.5	10.1	15.6	**068-2009**

Bulb strap (Danfoss patented)

Each valve is delivered with a Danfoss patented bulb strap. Spares can be ordered.

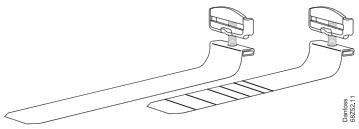

Code no.	Description	Pack mode	Quantity / pack
068U3505	**Bulb strap 0.4 mm Max. 28 mm tube**	**I**	**45**
068U3506	**Bulb strap 0.4 mm Max. 50 mm tube**	**I**	**45**
068U3507	**Bulb strap 0.4 mm Max. 28 mm tube**	**M**	**25**
068U3508	**Bulb strap 0.4 mm Max. 50 mm tube**	**M**	**25**

Ordering. Components with flare × solder connection

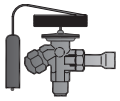

Thermostatic element with sensor band. Without orifice, filter cone and nuts.

Refrigerant	Valve type	Pressure equalization[3]	Capillary tube	Connection			Code no.				
				Inlet Flare	Outlet ODF solder		Range N −40 to +10°C		Range NL −40 to −15°C	Range B −60 to −25°C	
			m	in. / mm	in.	mm	Without MOP	MOP +15°C	Mop −10°C	Without MOP	MOP −20°C
R22/R407C[4]	TX 2	Int.	1.5	3/8	1/2		068Z3281	068Z3287		068Z3357	068Z3319
	TX 2	Int.	1.5	10		12	068Z3302	068Z3308	068Z3366	068Z3361	
	TEX 2	Ext.	1.5	3/8	1/2		068Z3284	068Z3290		068Z3359	068Z3320
	TEX 2	Ext.	1.5	10		12	068Z3305	068Z3311	068Z3367	068Z3363	
R407C	TZ 2	Int.	1.5	3/8	1/2			068Z3329			
	TZ 2	Int.	1.5	10		12	068Z3502	068Z3514			
	TEZ 2	Ext.	1.5	3/8	1/2		068Z3446	068Z3447			
	TEZ 2	Ext.	1.5	10		12	068Z3503	068Z3515			
R134a	TN 2	Int.	1.5	3/8	1/2		068Z3383	068Z3387			
	TN 2	Int.	1.5	10		12	068Z3384	068Z3388			
	TEN 2	Ext.	1.5	3/8	1/2		068Z3385	068Z3389			
	TEN 2	Ext.	1.5	10		12	068Z3386	068Z3390			
R404A/ R507	TS 2	Int.	1.5	3/8	1/2		068Z3414	068Z3416	068Z3429	068Z3418	068Z3420
	TS 2	Int.	1.5	10		12	068Z3435	068Z3423	068Z3436	068Z3425	068Z3427
	TES 2	Ext.	1.5	3/8	1/2		068Z3415	068Z3417	068Z3430	068Z3419	068Z3421
	TES 2	Ext.	1.5	10		12	068Z3422	068Z3424	068Z3437	068Z3426	068Z3428

[3]) TE valves with inch outlet have 1/4 inch pressure equalization. TE valves with mm outlet have 6 mm pressure equalization.
[4]) For R407C plants. Please select valves from the dedicated R407C program

Solder adaptor

The adaptor is for use with thermostatic expansion valves T 2 and TE 2 with flare × solder connections. When the adaptor is fitted correctly it meets the sealing requirements of DIN 8964.

The adaptor offers the following advantages:

- The orifice assembly can be replaced.
- The filter can be cleaned or replaced.

When using the solder adapter, a special orifice assembly is required. Please use the following tables to select both the appropriate adapter and orifice asembly.
Only in this way can the sealing requirements of DIN 8964 be fulfilled.
Solder adaptor for filter drier (FSA) may not be used in the T 2 inlet.

Solder adaptor without orifice assembly and filter

Connection ODF solder	Code no.
1/4 in.	068-2062
6 mm	068-2063
3/8 in.	068-2060
10 mm	068-2061

Filter for solder adaptor

Description	Code no.
Filter excl. orifice assembly	068-0015

Orifice assembly with filter for solder adaptor

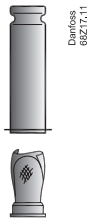

Orifice no.	Code no.
0X	068-2089
00	068-2090
01	068-2091
02	068-2092
03	068-2093
04	068-2094
05	068-2095
06	068-2096

For capacities see previous page.

Bulb strap (Danfoss patented)

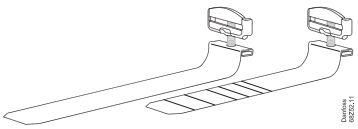

Each valve is delivered with a Danfoss patented bulb strap. Spares can be ordered.

Code no.	Description	Pack mode	Quantity / pack
068U3505	Bulb strap 0.4 mm Max. 28 mm tube	I	45
068U3506	Bulb strap 0.4 mm Max. 50 mm tube	I	45
068U3507	Bulb strap 0.4 mm Max. 28 mm tube	M	25
068U3508	Bulb strap 0.4 mm Max. 50 mm tube	M	25

How to select a valve

Example:

Refrigerant = R407C
Q (capacity) = 1.1kW
Tcon (condensing temperature) = 25°C
Tevap (evaporator temperature) = -25°C
Tsub (subcooling temperature) =10K
Dpd (distributer pressure drop) = 1 bar

Q (capacity) = 1.1kW
fsub (subcooling correction factor) = 1.07
fp (distribution correction factor) = 0.96

$$\frac{Q}{fsub \times fp} = \text{Selected capacity}$$

$$\frac{1.1}{1.07 \times 0.96} = 1.1 \text{ kW}$$

The selection will be:
TE2 orifice 00 (1.32 kW > 1.1 kW)

Subcooling correction factor 'fsub'

Subcooling [K]	2	4	10	15
Correction factor	0.97	1.00	1.07	1.12

Distributer correction factor 'fp'

Pressuredrop [bar]	Evaporating temp.			
	-40	-35	-30	-25
0	1	1	1	1
1	0.96	0.96	0.96	0.96
1.5	0.94	0.94	0.94	0.94
2	0.92	0.92	0.92	0.92

Capacity in kW, range N, -40°C to +10°C,
opening superheat sh= 6 K

Cond. temp. [°C]	Capacity [kW] Evaporating [°C]				Valve	Orifice no.
	-30	-25	-20	-15		
25	0.83	0.86	0.88	0.89	T2 / TE2	0X
	1.2	1.3	1.4	1.5	T2 / TE2	00
	1.8	2.0	2.3	2.5	T2 / TE2	01

Capacity

R22

Capacity in kW, range N -40°C to +10°C. Opening superheat sh= 6 K

Cond. temp. [°C]	Capacity [kW] Evaporating [°C]											Valve	Orifice no.
	-40	-35	-30	-25	-20	-15	-10	-5	0	5	10		
25	0.75	0.79	0.82	0.84	0.86	0.86	0.86	0.84	0.81	0.76	0.68	T2 / TE2	0X
	0.95	1.1	1.2	1.3	1.4	1.5	1.5	1.6	1.6	1.5	1.4	T2 / TE2	00
	1.3	1.5	1.7	2.0	2.2	2.4	2.6	2.8	2.9	2.9	2.8	T2 / TE2	01
	1.5	1.7	2.0	2.3	2.6	2.9	3.2	3.6	3.8	4.0	3.9	T2 / TE2	02
	2.5	2.9	3.3	3.8	4.32	4.9	5.4	6.0	6.4	6.7	6.6	T2 / TE2	03
	3.6	4.2	4.8	5.5	6.4	7.2	8.2	9.0	9.7	10.1	9.9	T2 / TE2	04
	4.7	5.4	6.3	7.2	8.3	9.5	10.8	12.1	13.1	13.7	13.5	T2 / TE2	05
	5.5	6.4	7.4	8.5	9.7	11.1	12.7	14.2	15.4	16.2	16.0	T2 / TE2	06

°C	-40	-35	-30	-25	-20	-15	-10	-5	0	5	10		
35	0.78	0.82	0.86	0.89	0.91	0.92	0.93	0.93	0.92	0.89	0.85	T2 / TE2	0X
	0.99	1.1	1.2	1.4	1.5	1.6	1.7	1.7	1.8	1.8	1.7	T2 / TE2	00
	1.4	1.6	1.8	2.1	2.3	2.6	2.9	3.1	3.3	3.5	3.5	T2 / TE2	01
	1.6	1.8	2.1	2.4	2.7	3.1	3.5	4.0	4.4	4.7	4.9	T2 / TE2	02
	2.6	3.0	3.5	4.0	4.6	5.3	6.0	6.7	7.4	8.0	8.4	T2 / TE2	03
	3.9	4.4	5.1	5.9	6.8	7.9	9.0	10.1	11.2	12.1	12.7	T2 / TE2	04
	5.0	5.8	6.7	7.7	8.9	10.3	11.9	13.6	15.3	16.7	17.5	T2 / TE2	05
	5.9	6.8	7.8	9.0	10.4	12.1	13.9	15.9	17.9	19.7	20.7	T2 / TE2	06

R22

Capacity in kW, range N -40°C to +10°C. Opening superheat sh= 6 K

Cond. temp. [°C]	Capacity [kW] Evaporating [°C]											Valve	Orifice no.
	-40	-35	-30	-25	-20	-15	-10	-5	0	5	10		
45	0.80	0.84	0.88	0.91	0.94	0.96	0.97	0.98	0.98	0.97	0.95	T2 / TE2	0X
	1.0	1.1	1.3	1.4	1.5	1.6	1.8	1.8	1.9	1.9	1.9	T2 / TE2	00
	1.4	1.6	1.9	2.1	2.4	2.7	3.0	3.3	3.6	3.8	4.0	T2 / TE2	01
	1.6	1.9	2.1	2.5	2.8	3.3	3.7	4.2	4.7	5.2	5.6	T2 / TE2	02
	2.7	3.1	3.6	4.2	4.8	5.5	6.3	7.2	8.1	8.9	9.6	T2 / TE2	03
	4.1	4.7	5.4	6.2	7.1	8.2	9.5	10.8	12.2	13.4	14.5	T2 / TE2	04
	5.3	6.1	7.0	8.1	9.4	10.9	12.6	14.6	16.7	18.7	20.3	T2 / TE2	05
	6.2	7.1	8.2	9.4	10.9	12.7	14.7	17.0	19.5	22.0	24.0	T2 / TE2	06

°C	-40	-35	-30	-25	-20	-15	-10	-5	0	5	10		
55	0.79	0.84	0.88	0.91	0.94	0.97	0.98	1.00	1.00	1.00	0.99	T2 / TE2	0X
	1.0	1.1	1.3	1.4	1.5	1.7	1.8	1.9	2.0	2.0	2.0	T2 / TE2	00
	1.4	1.6	1.9	2.1	2.4	2.7	3.1	3.4	3.7	4.0	4.2	T2 / TE2	01
	1.6	1.9	2.2	2.5	2.9	3.3	3.8	4.4	4.9	5.5	6.0	T2 / TE2	02
	2.8	3.2	3.7	4.3	4.9	5.7	6.5	7.5	8.5	9.5	10.3	T2 / TE2	03
	4.2	4.8	5.5	6.4	7.3	8.4	9.7	11.1	12.5	14.0	15.3	T2 / TE2	04
	5.5	6.3	7.2	8.3	9.	11.2	13.0	15.0	17.3	19.6	21.7	T2 / TE2	05
	6.4	7.3	8.4	9.7	11.2	13.0	15.1	17.6	20.3	23.2	25.8	T2 / TE2	06

Subcooling correction factor 'fsub'

Subcooling [K]	1	4	10	15	20	25	30	40	45	50
Correction factor	0.97	1.00	1.06	1.10	1.15	1.19	1.24	1.33	1.37	1.41

*Distributer correction factor 'fp' **

Pressure drop [bar]	Evaporating temp.										
	-40	-35	-30	-25	-20	-15	-10	-5	0	5	10
0	1	1	1	1	1	1	1	1	1	1	1
1	0.96	0.95	0.95	0.95	0.95	0.95	0.94	0.94	0.93	0.92	0.91
1.5	0.93	0.93	0.93	0.93	0.92	0.92	0.91	0.91	0.90	0.88	0.86
2	0.91	0.91	0.90	0.90	0.90	0.89	0.88	0.87	0.86	0.84	0.81

*calculated at 32°C condensing temperature

Capacity

Capacity in kW, range B -60°C to -25°C. Opening superheat sh= 6 K

R22

Cond. temp. [°C]	Capacity [kW] Evaporating [°C] -60	-55	-50	-45	-40	-35	-30	-25	Valve	Orifice no.
20	0.53	0.60	0.66	0.71	0.76	0.79	0.82	0.83	T2 / TE2	0X
	0.54	0.64	0.76	0.88	1.0	1.1	1.2	1.3	T2 / TE2	00
	0.71	0.86	1.0	1.2	1.4	1.7	1.9	2.1	T2 / TE2	01
	0.78	0.95	1.2	1.4	1.6	1.9	2.2	2.5	T2 / TE2	02
	1.3	1.6	1.9	2.3	2.7	3.2	3.7	4.2	T2 / TE2	03
	1.8	2.2	2.7	3.3	3.9	4.6	5.3	6.1	T2 / TE2	04
	2.4	2.9	3.5	4.3	5.1	6.0	7.0	8.1	T2 / TE2	05
	2.9	3.5	4.2	5.0	6.0	7.1	8.3	9.6	T2 / TE2	06

°C	-60	-55	-50	-45	-40	-35	-30	-25		
30	0.55	0.62	0.68	0.74	0.79	0.83	0.87	0.89	T2 / TE2	0X
	0.6	0.7	0.8	0.9	1.1	1.2	1.3	1.4	T2 / TE2	00
	0.7	0.8	1.1	1.3	1.5	1.8	2.0	2.3	T2 / TE2	01
	0.8	1.0	1.2	1.4	1.7	2.0	2.3	2.7	T2 / TE2	02
	1.3	1.6	2.0	2.4	2.8	3.3	3.9	4.5	T2 / TE2	03
	1.9	2.3	2.8	3.4	4.0	4.7	5.6	6.5	T2 / TE2	04
	2.5	3.0	3.6	4.4	5.2	6.2	7.3	8.5	T2 / TE2	05
	2.9	3.6	4.3	5.2	6.2	7.3	8.6	10.1	T2 / TE2	06

Capacity in kW, range B -60°C to -25°C. Opening superheat sh= 6 K

R22

Cond. temp. [°C]	Capacity [kW] Evaporating [°C] -60	-55	-50	-45	-40	-35	-30	-25	Valve	Orifice no.
40	0.56	0.63	0.70	0.76	0.81	0.86	0.90	0.92	T2 / TE2	0X
	0.57	0.68	0.80	0.93	1.1	1.2	1.4	1.5	T2 / TE2	00
	0.75	0.91	1.1	1.3	1.5	1.8	2.1	2.4	T2 / TE2	01
	0.82	1.0	1.2	1.5	1.7	2.0	2.4	2.8	T2 / TE2	02
	1.4	1.7	2.0	2.4	2.9	3.4	4.0	4.6	T2 / TE2	03
	1.9	2.3	2.8	3.4	4.1	4.8	5.7	6.6	T2 / TE2	04
	2.5	3.1	3.7	4.4	5.3	6.3	7.4	8.7	T2 / TE2	05
	3.0	3.6	4.3	5.2	6.2	7.4	8.7	10.3	T2 / TE2	06

°C	-60	-55	-50	-45	-40	-35	-30	-25		
50	0.56	0.63	0.70	0.76	0.82	0.87	0.91	0.94	T2 / TE2	0X
	0.57	0.68	0.80	0.9	1.1	1.2	1.4	1.5	T2 / TE2	00
	0.75	0.9	1.1	1.3	1.6	1.8	2.1	2.4	T2 / TE2	01
	0.8	1.0	1.2	1.5	1.7	2.1	2.4	2.8	T2 / TE2	02
	1.4	1.7	2.0	2.4	2.9	3.4	4.0	4.8	T2 / TE2	03
	1.9	2.3	2.8	3.4	4.1	4.8	5.7	6.7	T2 / TE2	04
	2.5	3.1	3.7	4.4	5.3	6.3	7.4	8.7	T2 / TE2	05
	3.0	3.6	4.3	5.2	6.2	7.4	8.7	10.2	T2 / TE2	06

Subcooling correction factor 'fsub'

Subcooling [K]	1	4	10	15	20	25	30	40	45	50
Correction factor	0.97	1.00	1.06	1.10	1.15	1.19	1.24	1.33	1.37	1.41

*Distributer correction factor 'fp' **

Pressure drop [bar]	Evaporating temp. -40	-35	-30	-25	-20	-15	-10	-5	0	5	10
0	1	1	1	1	1	1	1	1	1	1	1
1	0.96	0.95	0.95	0.95	0.95	0.95	0.94	0.94	0.93	0.92	0.91
1,5	0.93	0.93	0.93	0.93	0.92	0.92	0.91	0.91	0.90	0.88	0.86
2	0.91	0.91	0.90	0.90	0.90	0.89	0.88	0.87	0.86	0.84	0.81

*calculated at 32°C condensing temperature

Capacity

R407C

CCapacity in kW, range N -40°C to +10°C. Opening superheat sh= 6 K

Cond. temp. [°C]	Capacity [kW] Evaporating [°C]											Valve	Orifice no.
	-40	-35	-30	-25	-20	-15	-10	-5	0	5	10		
25	0.76	0.80	0.83	0.86	0.88	0.89	0.90	0.90	0.88	0.86	0.81	T2 / TE2	0X
	0.99	1.1	1.2	1.3	1.4	1.5	1.6	1.7	1.7	1.7	1.6	T2 / TE2	00
	1.4	1.6	1.8	2.0	2.3	2.5	2.8	3.0	3.2	3.3	3.3	T2 / TE2	01
	1.6	1.8	2.1	2.4	2.7	3.0	3.4	3.8	4.2	4.5	4.6	T2 / TE2	02
	2.7	3.0	3.4	3.9	4.5	5.1	5.7	6.4	7.1	7.6	7.9	T2 / TE2	03
	3.9	4.4	5.0	5.7	6.4	7.3	8.4	9.5	10.6	11.7	12.5	T2 / TE2	04
	5.0	5.7	6.5	7.4	8.5	9.7	11.0	12.5	14.0	15.4	16.3	T2 / TE2	05
	5.9	6.8	7.7	8.8	10.1	11.5	13.2	15.0	16.8	18.5	19.4	T2 / TE2	06

°C	-40	-35	-30	-25	-20	-15	-10	-5	0	5	10		
35	0.76	0.80	0.84	0.87	0.90	0.92	0.94	0.95	0.95	0.94	0.92	T2 / TE2	0X
	0.99	1.1	1.2	1.3	1.5	1.6	1.7	1.8	1.8	1.9	1.9	T2 / TE2	00
	1.4	1.6	1.8	2.1	2.3	2.6	2.9	3.2	3.4	3.6	3.8	T2 / TE2	01
	1.6	1.8	2.1	2.4	2.7	3.1	3.5	4.0	4.5	4.9	5.3	T2 / TE2	02
	2.7	3.0	3.5	4.0	4.6	5.2	6.0	6.8	7.6	8.4	9.0	T2 / TE2	03
	3.9	4.5	5.1	5.8	6.7	7.6	8.7	10.0	11.4	12.9	14.2	T2 / TE2	04
	5.1	5.8	6.7	7.6	8.7	10.0	11.5	13.2	15.1	17.0	18.6	T2 / TE2	05
	6.0	6.9	7.9	9.0	10.4	11.9	13.8	15.9	18.1	20.4	22.2	T2 / TE2	06

R407C

Capacity in kW, range N -40°C to +10°C. Opening superheat sh= 6 K

Cond. temp. [°C]	Capacity [kW] Evaporating [°C]											Valve	Orifice no.
	-40	-35	-30	-25	-20	-15	-10	-5	0	5	10		
40	0.73	0.78	0.82	0.86	0.89	0.92	0.94	0.96	0.97	0.97	0.97	T2 / TE2	0X
	0.95	1.1	1.2	1.3	1.4	1.6	1.7	1.8	1.9	1.9	1.9	T2 / TE2	00
	1.4	1.6	1.8	2.0	2.3	2.6	2.9	3.2	3.5	3.8	4.0	T2 / TE2	01
	1.6	1.8	2.0	2.3	2.7	3.1	3.5	4.0	4.6	5.1	5.6	T2 / TE2	02
	2.6	3.0	3.4	3.9	4.5	5.2	6.0	6.9	7.8	8.7	9.5	T2 / TE2	03
	3.9	4.4	5.1	5.8	6.7	7.7	8.8	10.2	11.7	13.4	15.0	T2 / TE2	04
	5.1	5.8	6.6	7.6	8.7	10.1	11.7	13.5	15.6	17.7	19.8	T2 / TE2	05
	5.9	6.8	7.8	8.9	10.3	12.0	13.9	16.1	18.7	21.3	23.6	T2 / TE2	06

°C	-40	-35	-30	-25	-20	-15	-10	-5	0	5	10		
50	0.68	0.73	0.77	0.81	0.85	0.88	0.91	0.93	0.95	0.96	0.96	T2 / TE2	0X
	0.9	1.0	1.1	1.2	1.4	1.5	1.6	1.7	1.8	1.9	1.9	T2 / TE2	00
	1.3	1.5	1.7	1.9	2.2	2.5	2.8	3.1	3.4	3.7	4.0	T2 / TE2	01
	1.5	1.7	1.9	2.2	2.6	3.0	3.4	3.9	4.5	5.1	5.6	T2 / TE2	02
	2.5	2.8	3.3	3.8	4.4	5.1	5.8	6.7	7.7	8.7	9.6	T2 / TE2	03
	3.8	4.3	4.9	5.6	6.5	7.5	8.7	10.0	11.6	13.3	15.1	T2 / TE2	04
	4.9	5.6	6.4	7.4	8.5	9.8	11.4	13.3	15.4	17.8	20.0	T2 / TE2	05
	5.6	6.5	7.5	8.6	10.0	11.6	13.6	15.9	18.5	21.3	24.0	T2 / TE2	06

Subcooling correction factor 'fsub'

Subcooling [K]	1	4	10	15	20	25	30	40	45	50
Correction factor	0.97	1.00	1.07	1.12	1.18	1.24	1.29	1.40	1.46	1.51

*Distributer correction factor 'fp' **

Pressure drop [bar]	Evaporating temp.										
	-40	-35	-30	-25	-20	-15	-10	-5	0	5	10
0	1	1	1	1	1	1	1	1	1	1	1
1	0.96	0.96	0.96	0.96	0.96	0.96	0.95	0.95	0.95	0.94	0.93
1,5	0.94	0.94	0.94	0.94	0.94	0.93	0.93	0.93	0.92	0.91	0.90
2	0.92	0.92	0.92	0.92	0.91	0.91	0.91	0.90	0.89	0.88	0.86

*calculated at 32°C condensing temperature

Capacity

Capacity in kW, range N -40°C to +10°C. Opening superheat sh= 6 K

R134a

Cond. temp. [°C]	Capacity [kW] Evaporating [°C] -40	-35	-30	-25	-20	-15	-10	-5	0	5	10	Valve	Orifice no.
25	0.48	0.51	0.54	0.57	0.59	0.61	0.62	0.62	0.61	0.58	0.54	T2 / TE2	0X
	0.52	0.59	0.67	0.74	0.82	0.89	0.95	1.0	1.0	1.0	0.98	T2 / TE2	00
	0.70	0.81	0.92	1.1	1.2	1.3	1.5	1.6	1.7	1.8	1.8	T2 / TE2	01
	0.78	0.90	1.0	1.2	1.4	1.5	1.7	1.9	2.1	2.2	2.2	T2 / TE2	02
	1.3	1.5	1.7	2.0	2.3	2.6	2.9	3.2	3.5	3.7	3.8	T2 / TE2	03
	1.9	2.2	2.5	2.9	3.3	3.7	4.2	4.7	5.6	5.5	5.7	T2 / TE2	04
	2.5	2.9	3.3	3.8	4.3	4.9	5.6	6.2	6.8	7.3	7.5	T2 / TE2	05
	3.0	3.4	3.9	4.5	5.2	5.9	6.7	7.5	8.2	8.7	9.0	T2 / TE2	06

°C	-40	-35	-30	-25	-20	-15	-10	-5	0	5	10		
35	0.49	0.53	0.57	0.60	0.63	0.65	0.67	0.68	0.69	0.68	0.66	T2 / TE2	0X
	0.54	0.61	0.69	0.78	0.86	0.95	1.0	1.1	1.2	1.2	1.2	T2 / TE2	00
	0.72	0.83	0.96	1.1	1.1	1.4	1.6	1.8	2.0	2.1	2.2	T2 / TE2	01
	0.81	0.93	1.1	1.2	1.4	1.6	1.9	2.1	2.4	2.6	2.8	T2 / TE2	02
	1.4	1.6	1.8	2.1	2.4	2.8	3.1	3.5	4.0	4.4	4.7	T2 / TE2	03
	2.0	2.3	2.6	3.0	3.5	4.0	4.6	5.2	5.9	6.5	7.1	T2 / TE2	04
	2.7	3.0	3.5	4.0	4.6	5.3	6.1	6.9	7.7	8.6	9.3	T2 / TE2	05
	3.2	3.6	4.1	4.8	5.5	6.3	7.2	8.2	9.2	10.2	11.1	T2 / TE2	06

Capacity in kW, range N -40°C to +10°C. Opening superheat sh= 6 K

R134a

Cond. temp. [°C]	Capacity [kW] Evaporating [°C] -40	-35	-30	-25	-20	-15	-10	-5	0	5	10	Valve	Orifice no.
45	0.49	0.53	0.57	0.61	0.64	0.67	0.69	0.71	0.73	0.74	0.74	T2 / TE2	0X
	0.54	0.61	0.70	0.78	0.88	0.97	1.07	1.2	1.3	1.3	1.4	T2 / TE2	00
	0.73	0.84	0.97	1.1	1.3	1.5	1.7	1.9	2.1	2.3	2.5	T2 / TE2	01
	0.82	0.94	1.1	1.3	1.5	1.7	1.9	2.2	2.5	2.8	3.1	T2 / TE2	02
	1.4	1.6	1.8	2.1	2.5	2.8	3.3	3.7	4.2	4.7	5.2	T2 / TE2	03
	2.1	2.4	2.7	3.2	3.6	4.2	4.8	5.5	6.2	7.1	7.9	T2 / TE2	04
	2.8	3.1	3.6	4.1	4.8	5.5	6.3	7.2	8.2	9.3	10.4	T2 / TE2	05
	3.3	3.7	4.2	4.9	5.6	6.5	7.5	8.6	9.8	11.1	12.4	T2 / TE2	06

°C	-40	-35	-30	-25	-20	-15	-10	-5	0	5	10		
55	0.47	0.52	0.56	0.60	0.63	0.66	0.69	0.72	0.74	0.75	0.76	T2 / TE2	0X
	0.53	0.60	0.69	0.77	0.87	0.97	1.1	1.2	1.3	1.4	1.4	T2 / TE2	00
	0.72	0.83	0.95	1.1	1.3	1.5	1.7	1.9	2.1	2.3	2.6	T2 / TE2	01
	0.81	0.93	1.1	1.3	1.5	1.7	2.0	2.2	2.6	2.9	3.2	T2 / TE2	02
	1.4	1.6	1.8	2.1	2.4	2.8	3.3	3.8	4.3	4.9	5.5	T2 / TE2	03
	2.1	2.4	2.8	3.2	3.7	4.2	4.9	5.6	6.4	7.3	8.3	T2 / TE2	04
	2.8	3.2	3.6	4.2	4.8	5.5	6.4	7.3	8.4	9.6	10.9	T2 / TE2	05
	3.3	3.7	4.3	4.9	5.7	6.5	7.5	8.7	10.0	11.4	13.0	T2 / TE2	06

Subcooling correction factor 'fsub'

Subcooling [K]	1	4	10	15	20	25	30	40	45	50
Correction factor	0.97	1.00	1.07	1.12	1.18	1.23	1.29	1.40	1.45	1.50

*Distributer correction factor 'fp' **

Pressure drop [bar]	Evaporating temp. -40	-35	-30	-25	-20	-15	-10	-5	0	5	10
0	1	1	1	1	1	1	1	1	1	1	1
1	0.93	0.93	0.93	0.93	0.92	0.92	0.92	0.91	0.90	0.89	0.87
1,5	0.90	0.89	0.89	0.89	0.88	0.88	0.87	0.86	0.84	0.82	0.79
2	0.92	0.92	0.92	0.92	0.91	0.91	0.90	0.89	0.88	0.87	0.84

*calculated at 32°C condensing temperature

Capacity

Capacity in kW, range N -40°C to +10°C. Opening superheat sh= 6 K

R404A

Cond. temp. [°C]	Capacity [kW] Evaporating [°C]											Valve	Orifice no.
	-40	-35	-30	-25	-20	-15	-10	-5	0	5	10		
25	0.55	0.58	0.61	0.63	0.64	0.65	0.65	0.64	0.62	0.59	0.54	T2 / TE2	0X
	0.72	0.82	0.92	1.0	1.1	1.2	1.2	1.2	1.2	1.2	1.1	T2 / TE2	00
	1.0	1.2	1.4	1.6	1.8	2.0	2.2	2.3	2.4	2.4	2.3	T2 / TE2	01
	1.1	1.3	1.6	1.9	2.2	2.5	2.8	3.1	3.3	3.3	3.2	T2 / TE2	02
	1.9	2.2	2.7	3.1	3.7	4.2	4.7	5.2	5.5	5.6	5.4	T2 / TE2	03
	2.7	3.2	3.8	4.6	5.4	6.2	7.1	7.9	8.5	8.8	8.7	T2 / TE2	04
	3.5	4.2	5.0	6.0	7.1	8.2	9.4	10.4	11.2	11.5	11.3	T2 / TE2	05
	4.2	5.0	6.0	7.1	8.4	9.8	11.2	12.5	13.4	13.7	13.3	T2 / TE2	06

°C	-40	-35	-30	-25	-20	-15	-10	-5	0	5	10		
35	0.52	0.55	0.59	0.62	0.64	0.66	0.67	0.68	0.68	0.66	0.64	T2 / TE2	0X
	0.67	0.8	0.9	1.0	1.1	1.2	1.2	1.3	1.3	1.3	1.3	T2 / TE2	00
	0.95	1.1	1.3	1.6	1.8	2.0	2.3	2.5	2.6	2.7	2.7	T2 / TE2	01
	1.1	1.3	1.5	1.8	2.2	2.5	2.9	3.3	3.6	3.8	3.9	T2 / TE2	02
	1.8	2.1	2.6	3.1	3.6	4.3	4.9	5.6	6.1	6.5	6.6	T2 / TE2	03
	2.6	3.1	3.8	4.5	5.4	6.4	7.5	8.6	9.5	10.3	10.6	T2 / TE2	04
	3.4	4.1	4.9	5.9	7.1	8.4	9.8	11.3	12.5	13.4	13.7	T2 / TE2	05
	4.0	4.8	5.8	7.0	8.4	10.0	11.7	13.4	14.9	16.0	16.3	T2 / TE2	06

Capacity in kW, range N -40°C to +10°C. Opening superheat sh= 6 K

R404A

Cond. temp. [°C]	Capacity [kW] Evaporating [°C]											Valve	Orifice no.
	-40	-35	-30	-25	-20	-15	-10	-5	0	5	10		
45	0.46	0.51	0.54	0.58	0.60	0.63	0.65	0.67	0.68	0.68	0.67	T2 / TE2	0X
	0.61	0.70	0.81	0.91	1.0	1.1	1.2	1.3	1.3	1.4	1.4	T2 / TE2	00
	0.86	1.0	1.2	1.4	1.7	1.9	2.2	2.4	2.7	2.8	2.9	T2 / TE2	01
	0.97	1.2	1.4	1.7	2.0	2.4	2.8	3.2	3.6	4.0	4.2	T2 / TE2	02
	1.6	2.0	2.4	2.9	3.4	4.1	4.8	5.5	6.2	6.8	7.1	T2 / TE2	03
	2.4	2.9	3.5	4.2	5.1	6.1	7.3	8.5	9.7	10.8	11.4	T2 / TE2	04
	3.2	3.8	4.6	5.5	6.7	8.0	9.6	11.2	12.9	14.2	14.9	T2 / TE2	05
	3.7	4.5	5.4	6.6	7.9	9.6	11.4	13.4	15.4	16.9	17.7	T2 / TE2	06

°C	-40	-35	-30	-25	-20	-15	-10	-5	0	5	10		
55	0.39	0.44	0.47	0.51	0.54	0.56	0.59	0.61	0.62	0.63	0.64	T2 / TE2	0X
	0.52	0.61	0.70	0.79	0.89	0.98	1.1	1.2	1.2	1.3	1.3	T2 / TE2	00
	0.74	0.89	1.1	1.3	1.5	1.7	2.0	2.2	2.4	2.6	2.7	T2 / TE2	01
	0.85	1.0	1.2	1.5	1.8	2.1	2.5	2.9	3.3	3.7	4.0	T2 / TE2	02
	1.4	1.7	2.1	2.5	3.0	3.6	4.3	5.1	5.8	6.4	6.8	T2 / TE2	03
	2.2	2.6	3.1	3.7	4.5	5.4	6.5	7.7	9.0	10.1	10.9	T2 / TE2	04
	2.8	3.4	4.1	4.9	5.9	7.2	8.6	10.3	11.9	13.4	14.4	T2 / TE2	05
	3.3	4.0	4.8	5.8	7.0	8.5	10.3	12.3	14.3	16.1	17.20	T2 / TE2	06

Subcooling correction factor 'fsub'

Subcooling [K]	1	4	10	15	20	25	30	40	45	50
Correction factor	0.95	1.00	1.09	1.17	1.24	1.32	1.39	1.53	1.61	1.68

*Distributer correction factor 'fp' **

Pressure drop [bar]	Evaporating temp.											
	-40	-35	-30	-25	-20	-15	-10	-5	0	5	10	-25
0	1	1	1	1	1	1	1	1	1	1	1	1
1	0.96	0.96	0.96	0.96	0.96	0.96	0.95	0.95	0.94	0.94	0.92	0.96
1,5	0.94	0.94	0.94	0.94	0.94	0.93	0.93	0.92	0.91	0.90	0.88	0.94
2	0.92	0.92	0.92	0.92	0.91	0.91	0.90	0.89	0.88	0.87	0.84	0.92

*calculated at 32°C condensing temperature

Capacity

Capacity in kW, range B, -60°C to -25°C, opening superheat sh= 6 K

R404A

Cond. temp. [°C]	Capacity [kW] Evaporating [°C] -60	-55	-50	-45	-40	-35	-30	-25	Valve	Orifice no.
20	0.45	0.48	0.52	0.55	0.58	0.61	0.63	0.64	T2 / TE2	0X
	0.51	0.57	0.65	0.74	0.83	0.92	1.0	1.1	T2 / TE2	00
	0.69	0.79	0.91	1.1	1.2	1.4	1.6	1.8	T2 / TE2	01
	0.75	0.87	1.0	1.2	1.4	1.6	1.9	2.1	T2 / TE2	02
	1.2	1.4	1.7	1.9	2.3	2.7	3.2	3.6	T2 / TE2	03
	1.7	1.9	2.3	2.7	3.2	3.8	4.4	5.1	T2 / TE2	04
	2.2	2.5	3.0	3.5	4.2	4.9	5.7	6.6	T2 / TE2	05
	2.6	3.0	3.5	4.2	4.9	5.8	6.8	7.9	T2 / TE2	06

°C	-60	-55	-50	-45	-40	-35	-30	-25		
30	0.43	0.47	0.50	0.54	0.58	0.61	0.63	0.64	T2 / TE2	0X
	0.49	0.55	0.63	0.72	0.82	0.92	1.0	1.1	T2 / TE2	00
	0.66	0.76	0.88	1.0	1.2	1.4	1.6	1.8	T2 / TE2	01
	0.73	0.84	0.98	1.2	1.4	1.6	1.9	2.2	T2 / TE2	02
	1.2	1.4	1.6	1.9	2.3	2.7	3.2	3.7	T2 / TE2	03
	1.7	2.0	2.3	2.7	3.2	3.8	4.5	5.2	T2 / TE2	04
	2.2	2.6	3.0	3.6	4.2	5.0	5.9	6.8	T2 / TE2	05
	2.6	3.0	3.5	4.2	5.0	5.9	6.9	8.1	T2 / TE2	06

Capacity in kW, range B, -60°C to -25°C, opening superheat sh= 6 K

R404A

Cond. temp. [°C]	Capacity [kW] Evaporating [°C] -60	-55	-50	-45	-40	-35	-30	-25	Valve	Orifice no.
40	0.39	0.43	0.47	0.51	0.54	0.57	0.60	0.62	T2 / TE2	0X
	0.44	0.51	0.58	0.67	0.77	0.87	0.97	1.1	T2 / TE2	00
	0.60	0.70	0.82	0.96	1.1	1.3	1.6	1.8	T2 / TE2	01
	0.67	0.78	0.92	1.1	1.3	1.6	1.8	2.1	T2 / TE2	02
	1.1	1.3	1.5	1.8	2.2	2.6	3.1	3.6	T2 / TE2	03
	1.7	2.0	2.3	2.7	3.2	3.7	4.4	5.1	T2 / TE2	04
	2.2	2.5	2.9	3.5	4.1	4.9	5.7	6.7	T2 / TE2	05
	2.6	3.0	3.4	4.0	4.8	5.7	6.7	7.9	T2 / TE2	06

°C	-60	-55	-50	-45	-40	-35	-30	-25		
50	0.33	0.37	0.41	0.44	0.48	0.51	0.54	0.56	T2 / TE2	0X
	0.38	0.44	0.51	0.59	0.68	0.78	0.88	0.96	T2 / TE2	00
	0.51	0.60	0.71	0.84	1.0	1.2	1.4	1.6	T2 / TE2	01
	0.57	0.67	0.80	0.96	1.2	1.4	1.7	1.9	T2 / TE2	02
	0.96	1.1	1.3	1.6	2.0	2.4	2.8	3.3	T2 / TE2	03
	1.6	1.8	2.1	2.4	2.9	3.4	4.0	4.7	T2 / TE2	04
	2.1	2.3	2.7	3.2	3.7	4.4	5.2	6.2	T2 / TE2	05
	2.5	2.8	3.1	3.7	4.3	5.1	6.1	7.2	T2 / TE2	06

Subcooling correction factor 'fsub'

Subcooling [K]	1	4	10	15	20	25	30	40	45	50
Correction factor	0.96	1.00	1.07	1.13	1.19	1.25	1.31	1.42	1.48	1.54

*Distributer correction factor 'fp' **

Pressure drop [bar]	Evaporating temp. -60	-55	-50	-45	-40	-35	-30	-25
0	1	1	1	1	1	1	1	1
1	0.97	0.96	0.96	0.96	0.96	0.96	0.96	0.96
1,5	0.95	0.95	0.95	0.94	0.94	0.94	0.94	0.94
2	0.93	0.93	0.93	0.93	0.92	0.92	0.92	0.92

*calculated at 32°C condensing temperature

Dimensions and weights

T 2 and TE 2

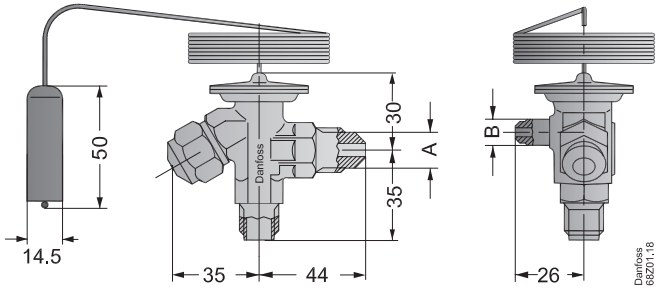

Flare × flare

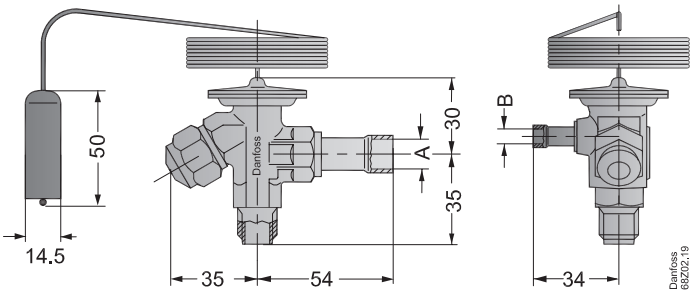

Flare × solder

	Outlet A	Equalization B	Weight kg / lb
Flare × flare	1/2" flare	1/4" flare	0.3 / 0.7
Flare × solder	1/2" solder 12 mm solder	1/4" solder 6 mm solder	0.3 / 0.7

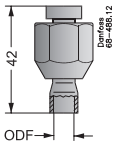

Solder adaptor

ODF	
in.	**mm**
1/4	6
3/8	10

Weight: 0.05 kg
0.11 lb

Danfoss can accept no responsibility for possible errors in catalogues, brochures and other printed material. Danfoss reserves the right to alter its products without notice. This also applies to products already on order provided that such alterations can be made without subsequential changes being necessary in specifications already agreed.
All trademarks in this material are property of the respective companies. Danfoss and the Danfoss logotype are trademarks of Danfoss A/S. All rights reserved.

© Danfoss A/S (AG-SMC / sw), 02 - 2012